Computational Modeling of Metamaterial for Thermal Camouflage

NATHANAEL TALEMOS

This Under Graduate Research Paper Submitted to the Department of Applied Physics, School of Applied Natural Science

Date: Jun06/2024

Declaration

I declare that this Under Graduate Research paper entitled **"Enhancing Thermal Camouflage Effectiveness through Innovative Metamaterials"** is my own work and has not been submitted to any university for similar purpose. The references used in this proposal are duly recognized by proper citations.

_____ _____ _____

Name of student Signature Date

Acknowledgment

Above all, I am thankful to the Almighty God for his love and kindness in providing me with health, strength, patience, and protection while I studied this task. Next, I would like to express my gratitude to my advisor, Dr. Fekadu Tolessa, for sharing his knowledge, expertise, and positive interpersonal skills as well as for giving up some of his valuable time to read and provide feedback on this research work. I also like to thank Mr. Tesfaye and Mr. Gemechis for their assistance with a variety of helpful software applications. Lastly, I would like to express my sincere gratitude to the Department of Applied Physics program at Adama Science and Technology University, School of Applied Natural Science, for providing me with a grant that enabled me to complete this research project.

Contents

LIST OF FIGURES 5

LIST OF ACRONYMS 6

ABSTRACT 7

1. INTRODUCTION 8

1.1 Back ground of the study 8

1.2 Statement of the Problem 9

1.3 Significance of the study 9

1.4 General and Specific Objectives 11

1.4.1 General Objectives: 11

1.4.2 Specific Objectives: 11

1.5 Scope of the Study: 11

2. LITERATURE REVIEW 13

2.1 Definition and Origin of MM 13

2.1 Characteristics of metamaterials 16

2.2 Types of metamaterials 17

2.2.1 Electromagnetic metamaterials 17

2.2.2 Acoustic metamaterial 18

2.2.3 Mechanical metamaterials 19

2.2.4 Thermal metamaterials 21

2.3 Ways to achieve thermal camouflage 23

2.3.1 Conductive thermal camouflage 24

2.3.2 Radiative thermal camouflage 25

2.4 What is Thermal Imaging? 25

2.4.1 How Does Thermal Imaging Work? 27
Chapter 3 Methodology 28
3.1 Crucial steps in methodology 28
3.1.1 Material Selection: 28
3.1.2 Configuration on COMSOL Multiphysics Software: 31
4. Result and Discussion: 34
4.1 Effect of width of the unit cell (w) on spectral absorption of the emitter 36
4.2 Effect of bottom radius of Nano-cone (r1) 36
4.3 Effect of thickness of dielectric (h2) 37
4.4 Performance of designed metamaterial absorber 37
5. Conclusion 38
Reference 39

LIST OF FIGURES

Figure 1 Example of Metamaterial 13

Figure 2 (A) Schematic of a split-ring resonator (SRR) and (B) schematic of a metamaterial lattice used to demonstrate the negative refractive index formed by a square split-ring resonator array that imparts negative magnetic permeability to the material. 15

Figure 3 Example of Negative Refraction 16

Figure 4 (a) Cloak. (b) Concentrator. (c) Rotator/inverter. (d) Camouflage: single conducting cylinder appears like two insulating segments. (e) Equivalent temperature profile of camouflage illusion, with two insulating segments actually present and no conduction 23

Figure 5 Example of thermal detection 27

Figure 6 Property of Silicon 30

Figure 7 Effect of width of the unit cell (w) 36

Figure 8 Effect of bottom radius of Nano-cone 36

Figure 9 Effect of thickness of dielectric 37

Figure 10 Performance of designed Metamaterial Absorber 37

LIST OF ACRONYMS

Abbreviation	Meaning
MM	**Metamaterial**
MDM	**Metal Dielectric Metal**
TC	**Thermal camouflage**
IR	**Infrared**
MIR	**Mid-infrared**
FDTD	**Finite-Difference Time-Domain**
FEM	**Finite Element Methods**
EM	**Electromagnetism**
COMSOL	**Computer Solution**

ABSTRACT

In this research work, a model of metal-dielectric-metal (MDM) multi-layer perfect absorber for infrared detection technology has been developed. Its absorption properties are numerically studied by finite-different time-domain (FDTD) method. Numerical results show that the MDM structure has the maximum absorption can obtain 98.3%. More interestingly, the absorption characteristics of the MDM metamaterial is that it is applicable for any environment, which greatly improves the convenience of the device in practical application. It also can be used as a cooling building. Therefore, I believe this structure has great applications in mid-infrared detection technology such as Night Vision technology as well as object identification in low light and extremely dark conditions, Search and Rescue, Perimeter Surveillance, Fire Fighting Applications, Structure Profiles (buildings, tanks, etc.), Environmental Law Enforcement, Hidden Compartments and Electrical Panels, Motors, Bearings

1. INTRODUCTION

1.1 Back ground of the study

Thermal camouflage(TC) technologies, which aim at blending the infrared (IR) signature of targets into the background to counter the IR detection, have witnessed increasing development. To achieve thermal camouflage, the rule of thumb is to balance the thermal radiation between the target and the background, and the corresponding conductive strategy is to tune the local temperature field while the radiative strategy is to tune the local emissivity. Following these two basic strategies, the thermal metamaterials and wavelength-selective emissivity engineering to achieve thermal camouflage are first introduced. Then the more advanced dynamic strategies are reviewed that can adapt to the varying environment under the external stimuli, like electricity, light, strain, chemical, wetting, temperature, etc. Particularly the phase-changing and bioinspired materials are presented and reviewed. Finally, critical considerations on the challenges and opportunities of next-generation thermal camouflage technologies are elaborated and four future directions are cast, including temperature-responsive emissivity engineering, soft materials, multispectral camouflage, and detection-feedback system. Overall, a detailed introduction to the working principle, the state-of-the-art progress, and the critical thinking on the future development on thermal camouflage technologies are presented. Within the field of material science, the pursuit of more sophisticated methods of camouflage has prompted research into metamaterials possessing distinct thermal characteristics. In many applications, such as thermal management systems and military stealth technology, the capacity to control and change thermal signatures is critical. This work explores the computational modeling of thermally camouflaged metamaterials, providing a novel means of infrared detection concealment. MM show remarkable control over electromagnetic waves since they are designed to have features not present in naturally occurring materials. Theoretically, we can create materials with controlled thermal emission and reflection by applying these concepts to thermal wavelengths, which would essentially make objects harder to identify with infrared imaging. The computational aspect of this research allows for the simulation and optimization of metamaterial structures before physical prototypes are constructed, saving time and resources.

TC technologies, which aim at blending the infrared (IR) signature of targets into the background to counter the IR detection, have witnessed increasing development. To achieve thermal camouflage, the rule of thumb is to balance the thermal radiation between the target and the background, and the corresponding conductive strategy is to tune the local temperature field while the radiative strategy is to tune the local emissivity. Following these two basic strategies, the thermal metamaterials and wavelength-selective emissivity engineering to achieve thermal camouflage are first introduced. A thorough computational methodology for the creation and study of metamaterials specifically suited for thermal camouflage is presented in this paper. Our goal is to gain an understanding of the complex interactions between heat radiation and metamaterial constructions by means of rigorous modeling and simulation. In order to further adaptive thermal management and stealth technology, we want to forecast and illustrate the efficacy of different metamaterial designs in reaching targeted degrees of thermal invisibility. (Run Hu, 2021)

1.2 Statement of the Problem

Despite the effectiveness of existing TC in obscuring objects from thermal detection, limitations in material properties such as high emissivity and absorption over a broad range of wavelengths restrict their broad application and effectiveness in the field of military. This is why this research aims to overcome these limitations by exploring and developing innovative materials to enhance the effectiveness of TC, making it more versatile and adaptable for diverse operating environments and concealment requirements.

1.3 Significance of the study

The research study titled "Computational Modeling of Metamaterial for Thermal Camouflage" holds significant importance in the field of thermal camouflage. It has several key implications that contribute to advancements in stealth and concealment techniques, enhance detection accuracy, enable cost-effective design and optimization, facilitate practical implementation, bridge theory and experimentation, and set the stage for future research and advancements. Firstly, the research focuses on designing and analyzing a metamaterial specifically tailored for thermal camouflage. By modeling and simulating the behavior of the metamaterial, it contributes to the development of advanced techniques for reducing thermal signatures. These advancements have

significant implications for military applications, surveillance systems, and other fields where concealment and stealth are critical.

Secondly, the research explores the optimization of the absorption properties of the MM for IR radiation. By efficiently absorbing and manipulating thermal energy, it improves detection accuracy, reducing false positives and false negatives in thermal detection systems. This research can be applied to enhance the performance of infrared detectors, improving their reliability and effectiveness. Moreover, the research employs computational modeling techniques, offering a cost-effective alternative to traditional trial-and-error experimentation. By leveraging computational simulations, researchers can predict and analyze the absorption and sensing properties of the metamaterial before manufacturing or physical testing. This not only saves time and resources but also enables researchers to explore a wider range of design possibilities, accelerating the development of more efficient thermal camouflage materials. Additionally, the research investigates the practical implementation of the designed metamaterial. It demonstrates the convenience and ease of use in real-world scenarios by studying its independence from polarization and polarization angle. This finding has significant implications for practical applications where precise alignment and orientation may not always be feasible. The research also highlights potential applications of the metamaterial, such as gas and liquid detection, plasmon absorption switches, and Nano sensors, expanding its utility beyond thermal camouflage. Furthermore, the research helps bridge the gap between theoretical understanding and practical implementation. By validating the results through experimental verification, researchers gain a deeper understanding of the metamaterial's performance and ensure its real-world viability. This integration of theory and experimentation enhances the reliability and credibility of the research findings and sets a foundation for future studies.

Lastly, the research sets the stage for future advancements in the field of thermal camouflage. It opens avenues for further research and development in metamaterials, allowing exploration of more complex designs, integration with other materials, or alternative geometries to enhance absorption capabilities or broaden the operational range of the metamaterial. This research paves the way for continued advancements, ultimately leading to more effective thermal camouflage solutions. To sum up, the research titled "Computational Modeling of Metamaterial for Thermal Camouflage" holds significant significance by advancing stealth techniques, enhancing detection

accuracy, enabling cost-effective design and optimization, facilitating practical implementation, bridging theory and experimentation, and setting the stage for future research and advancements in the field of TC. (Zhao, 2017)

1.4 General and Specific Objectives

1.4.1 General Objectives:

- ✓ Develop strong computational modeling techniques to accurately predict the thermal performance of MM designs for thermal camouflage applications.
- ✓ Utilize these models to explore and optimize novel MM configurations for achieving near-perfect thermal invisibility across desired spectral bands.

1.4.2 Specific Objectives:

- ✓ To design enhanced thermal camouflaging MM.
- ✓ To maximize absorption.
- ✓ To increase absorption at 3-5μm of the IR range.

1.5 Scope of the Study:

This study focuses on the development and application of computational modeling techniques for designing metamaterials specifically adapted for TC in the infrared radiation region. The primary emphasis lies on the infrared (IR) spectrum, particularly the mid-infrared (MIR) region. These bands are crucial for thermal camouflage as they correspond to the peak thermal radiation emitted by most objects at ambient temperatures. The study will utilize COMSOL Multiphysics, a powerful computational modeling platform, to simulate the interaction of thermal radiation within the infrared spectrum with various metamaterial designs. COMSOL employs advanced numerical techniques, including both Finite-Difference Time-Domain (FDTD) and Finite Element Methods (FEM), to achieve this goal. A core aspect of the study involves exploring a diverse range of metamaterial configurations through computational modeling. This includes investigating the influence of factors like material composition, geometric structures (e.g., size, shape, periodicity of meta-atoms), and unit cell arrangement on the thermal performance of the MM. The computational models will be utilized to optimize metamaterial designs for achieving near-perfect thermal invisibility within the targeted infrared bands. This optimization process will involve

tailoring material properties and structural configurations to maximize absorption or scattering of thermal radiation in the infrared region.

Limitations

The scope excludes large-scale metamaterial fabrication and integration. However, the computational models might be adapted to incorporate manufacturability constraints in future stages.

2. LITERATURE REVIEW

2.1 Definition and Origin of MM

Metamaterials certainly represent the most recent achievement of the research in the field of unconventional materials and complex media. The name has been proposed within the scientific community working on complex media to identify a class of artificial materials exhibiting surprising and anomalous electromagnetic properties that cannot be found in natural materials. Following this definition and according to the general point of view of that community, the Greek word ‘‘meta’’ has been used in the sense of ‘‘emergence’’ of new properties from a special combination of materials exhibiting conventional electromagnetic behaviors. Nowadays, however, the most common meaning given to the prefix ‘‘meta’’ in metamaterials is ‘‘beyond,’’ as in the word metaphysics. Following this signification, metamaterials may be defined as artificial engineered materials exhibiting unique or unusual properties that cannot be found in natural materials at the frequencies of interest and, thus, allow going beyond some of the limitations encountered when using natural materials in microwave and optical components. For the time being, it seems that this is the most common definition of metamaterials adopted worldwide. This definition is also in agreement with the official one adopted by the first and sole international society on metamaterials existing worldwide, the ‘‘Virtual Institute for Artificial Electromagnetic Materials and Metamaterials’’.

Metamaterials are a class of artificial materials that are engineered to exhibit properties not found in natural materials. These unique properties are achieved through the carefully designed structure of the material, rather than just its chemical composition. At the core of metamaterials are

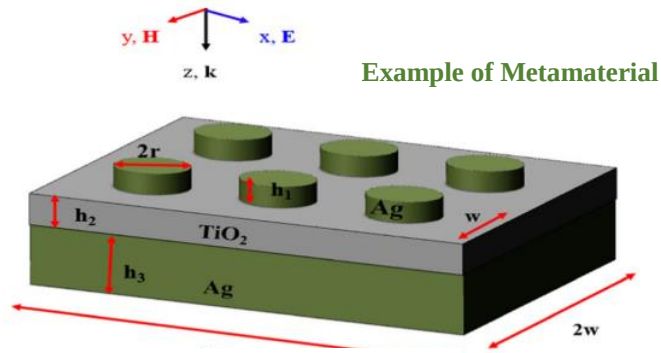

Figure 1 Example of Metamaterial

subwavelength structural elements, often referred to as "meta-atoms" or "meta-molecules". These elements are intentionally arranged in a periodic or aperiodic pattern within the material, allowing them to collectively interact with electromagnetic waves in a way that gives rise to extraordinary properties. (Paras & Gangwar, 2014)

One of the most remarkable properties of metamaterials is their ability to have a negative refractive index. This means that light can bend in the opposite direction compared to how it would behave in normal materials. This counterintuitive behavior is achieved by engineering the meta-atoms to have a negative electric permittivity and a negative magnetic permeability. When combined, these negative values result in a negative refractive index, which enables phenomena such as the "perfect lens" that can focus light beyond the diffraction limit. In addition to negative refraction, metamaterials can also be designed for other unique capabilities, such as electromagnetic cloaking, where the material can redirect waves around an object, effectively making it invisible. Metamaterials can also be engineered for super-resolution imaging, high-efficiency absorption or shielding of specific frequencies, and even reconfigurable properties that can be dynamically tuned.

The diverse range of metamaterial properties stems from the vast design space available for the meta-atoms and their arrangement within the material. By carefully controlling the size, shape, and distribution of these subwavelength structures, researchers can create materials with tailored responses to electromagnetic radiation across a wide range of frequencies, from radio waves to visible light and beyond. The field of metamaterials is an active area of research, with ongoing developments in materials science, electromagnetic theory, and engineering. As the understanding and fabrication techniques of metamaterials advance, they are poised to enable a wide range of applications, from cloaking and imaging to wireless communication and energy harvesting.

The first research on metamaterials was on negative refractive index metamaterials. In 1968, the Soviet scientist Veselago first proposed the concept of materials with negative dielectric constant and negative magnetic permeability at the same time, and predicted that these materials could be used to achieve negative refraction and inverse Doppler effects. Since the relationship between electric field E, magnetic field H and wave vector k no longer conforms to the right-handed spiral rule when the dielectric constant and permeability are negative at the same time, but satisfies the left-handed rule, these materials are also called "left-handed materials", but these characteristics do not exist in natural materials. The concept of metamaterials was not introduced until 1996 and 1999, when British scientists Pendry et al. designed a periodic arrangement of metallic thin wire structures and open resonant ring (SRR) structures and demonstrated that negative equivalent permittivity and negative permeability could be achieved, respectively.

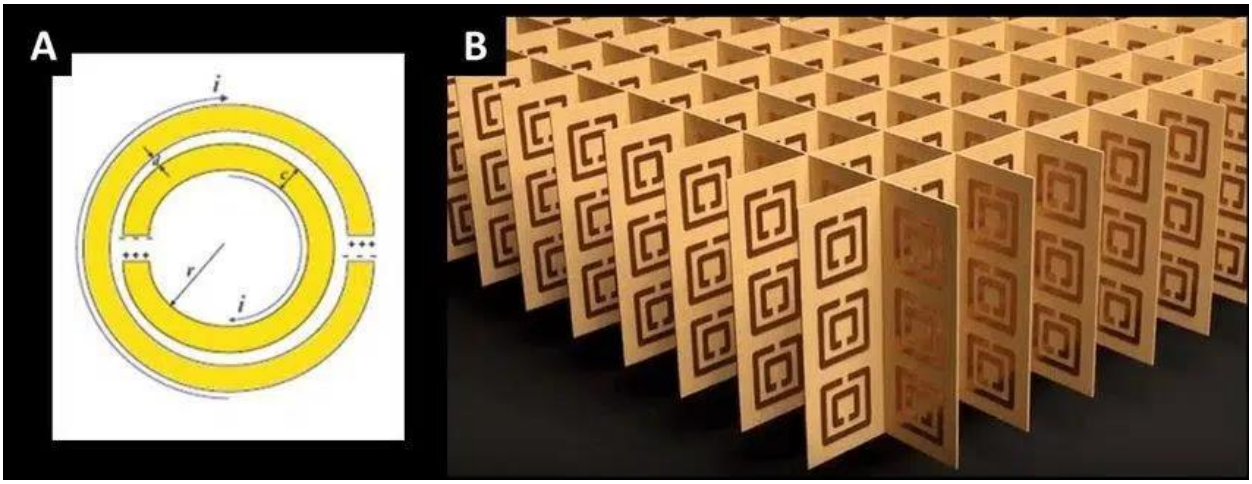

Figure 2 (A) Schematic of a split-ring resonator (SRR) and (B) schematic of a metamaterial lattice used to demonstrate the negative refractive index formed by a square split-ring resonator array that imparts negative magnetic permeability to the material.

The term "metamaterials" was originally coined by Professor Rodger M. Walser to describe naturally non-existent, artificially fabricated, three-dimensional composites with periodic structures. MM are artificial materials with extraordinary physical properties not found in natural materials. MM are designed around micrometer/nanometer-scale patterns or structures that allow them to interact with light or other forms of energy in ways that do not exist in nature.

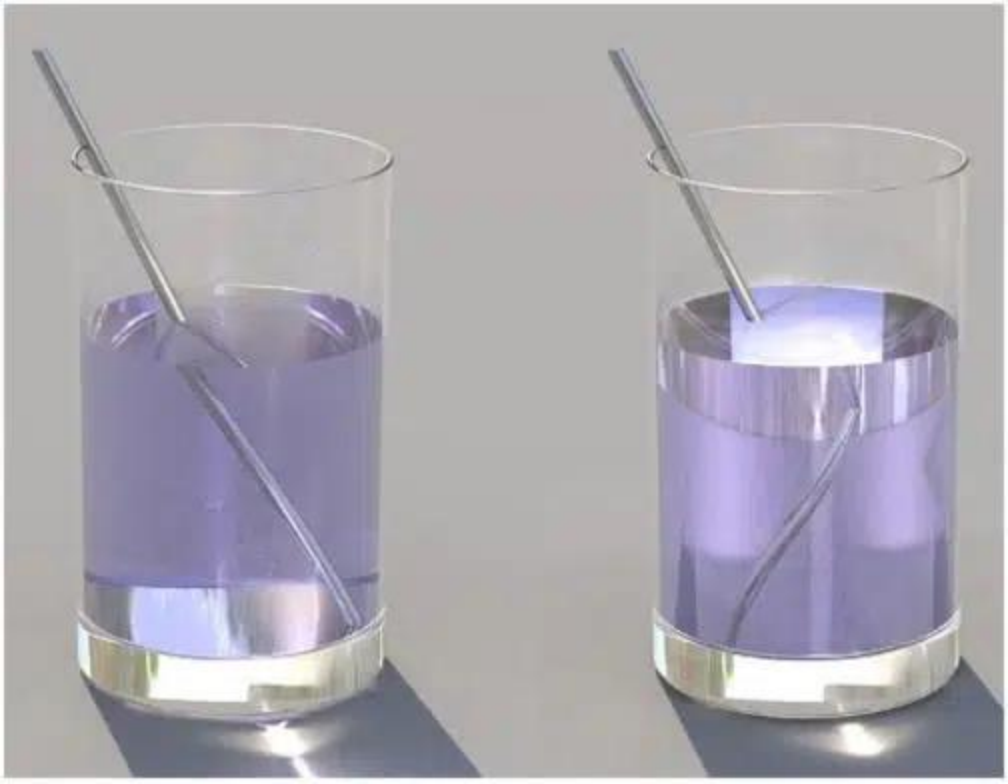

Figure 3 Example of Negative Refraction

MM are often associated with nanotechnology because the unit structure repeated in optical applications is measured in nanometers. The creation of metamaterials may only be possible through nanotechnology. In the future, as nanotechnology advances in the coming decades, it will unlock more new metamaterials and reduce their manufacturing costs.

2.1 Characteristics of metamaterials

I. Metamaterials are artificially designed and manufactured materials rather than naturally occurring materials.
II. Metamaterial is a composite or hybrid material, not a single or pure material.
III. Metamaterials exhibit physical properties that are supernormal and not all natural materials, such as negative refractive index, negative magnetic permeability, negative dielectric constant, and inverse Doppler effect.
IV. Metamaterials can be made to perform effective manipulation of light, electromagnetic and acoustic waves by changing the physical properties of the basic unit structure, shape, orientation and arrangement of the material. (Smith, 2004)

2.2 Types of metamaterials

- Electromagnetic metamaterials
- Acoustic Metamaterials
- Mechanical metamaterials
- Thermal Metamaterials

2.2.1 Electromagnetic metamaterials

An electromagnetic metamaterial affects electromagnetic waves that impinge on or interact with its structural features, which are smaller than the wavelength. To behave as a homogeneous material accurately described by an effective refractive index, its features must be much smaller than the wavelength. The unusual properties of metamaterials arise from the resonant response of each constituent element rather that their spatial arrangement into a lattice. It allows considering the local effective material parameters (permittivity and permeability). The resonance effect related to the mutual arrangement of elements is responsible for Bragg scattering, which underlies the physics of photonic crystals, another class of electromagnetic materials. Unlike the local resonances, Bragg scattering and corresponding Bragg stop-band have a low-frequency limit determined by the lattice spacing. The subwavelength approximation ensures that the Bragg stop-bands with the strong spatial dispersion effects are at higher frequencies and can be neglected. The criterion for shifting the local resonance below the lower Bragg stop-band make it possible to build a photonic phase transition diagram in a parameter space, for example, size and permittivity of the constituent element. Such diagram displays the domain of structure parameters allowing the metamaterial properties observation in the electromagnetic material. For microwave radiation, the features are on the order of millimeters. Microwave frequency metamaterials are usually constructed as arrays of electrically conductive elements (such as loops of wire) that have suitable inductive and capacitive characteristics. Many microwave metamaterials use split-ring resonators.

Photonic metamaterials are structured on the nanometer scale and manipulate light at optical frequencies. Photonic crystals and frequency-selective surfaces such as diffraction

gratings, dielectric mirrors and optical coatings exhibit similarities to subwavelength structured metamaterials. However, these are usually considered distinct from metamaterials, as their function arises from diffraction or interference and thus cannot be approximated as a homogeneous material. However, material structures such as photonic crystals are effective in the visible light spectrum. The middle of the visible spectrum has a wavelength of approximately 560 nm (for sunlight). Photonic crystal structures are generally half this size or smaller, that is < 280 nm. Plasmonic metamaterials utilize surface plasmons, which are packets of electrical charge that collectively oscillate at the surfaces of metals at optical frequencies. Frequency selective surfaces can exhibit subwavelength characteristics and are known variously as artificial magnetic conductors or High Impedance Surfaces. Frequency selective surfaces display inductive and capacitive characteristics that are directly related to their subwavelength structure. (Smith D. R., 2006) (Slyusar, 2009)

2.2.2 Acoustic metamaterial

An **acoustic metamaterial**, **sonic crystal**, or **phononic crystal** is a material designed to control, direct, and manipulate sound waves or phonons in gases, liquids, and solids (crystal lattices). Sound wave control is accomplished through manipulating parameters such as the bulk modulus β, density ρ, and chirality. They can be engineered to either transmit, or trap and amplify sound waves at certain frequencies. In the latter case, the material is an acoustic resonator.

Acoustic metamaterials are used to model and research extremely large-scale acoustic phenomena like seismic waves and earthquakes, but also extremely small-scale phenomena like atoms. The latter is possible due to band gap engineering: acoustic metamaterials can be designed such that they exhibit band gaps for phonons, similar to the existence of band gaps for electrons in solids or electron orbitals in atoms. That has also made the phononic crystal an increasingly widely researched component in quantum technologies and experiments that probe quantum mechanics. Important branches of physics and technology that rely heavily on acoustic metamaterials are negative refractive index material research, and quantum optomechanics. Acoustical engineering is typically concerned with noise control, medical ultrasound, sonar, sound reproduction, and how to measure some other physical properties using sound. With acoustic metamaterials the direction of sound through the medium can be controlled by manipulating the acoustic refractive index. Therefore, the capabilities of traditional acoustic technologies are

extended, for example, eventually being able to cloak certain objects from acoustic detection. (Guenneau, Movchan, Pétursson, & Anantha Ramakrishna, 2007)

2.2.3 Mechanical metamaterials

Mechanical metamaterials are artificial materials with mechanical properties that are defined by their mesostructure in addition to than their composition. They can be seen as a counterpart to the rather well-known family of optical metamaterials. They are often also termed *elastodynamic metamaterials* and include acoustic metamaterials as a special case of vanishing shear. Their mechanical properties can be designed to have values which cannot be found in nature.

A significant contributor to energy wastage is the inevitable generation as well as the uneven dissipation of heat. Practical methods to adeptly channel heat flux would then have widespread applications to improved energy utilization and thermal energy management. The first step would be to understand the notion of heat flux. From a thermodynamics viewpoint, the transfer of thermal energy due to temperature differences has been well codified. Based on traditional engineering antecedents, the subdivisions into particular mechanisms of heat transfer, as related to conductive, convective, and radiative pathways have also been made. While such partitioning has never been completely clear, scientific investigations have long had the objective of unifying such divisions. For instance, thermal conduction and convection has almost always been treated through a continuum basis, such as through the deployment of the diffusion or the energy conservation equations, while radiative phenomena have used quantum mechanical formulations incorporating both particle-and wave-like characteristics. In this context, much progress has been made at the nanoscale (in both length and time), where ballistic transport of heat could be used to describe phonon mediated conduction. However, there seem to be very little practical consequences for the macroscale in terms of practical spatial and temporal scales, at which heat management is typically an issue. A scientific objective is to describe thermal energy transfer on a unified basis, which may be provided through a metamaterials type description. Considering the correspondence of phonons to photons, both from a 2 fundamental particle point of view and their role as energy carriers in and out of materials respectively, and given the wide scale usage of optical elements such as lenses, waveguides, etc. The metamaterials terminology itself seems to have originated from the electromagnetism (EM) community, for the manipulation of EM fields through arrangement of specific materials. For example, the judicious placement of materials with a negative dielectric

constant and negative magnetic permeability yielded unique phenomena related to negative refraction, with the possibility of bending light the “wrong way”. Consequently, any diverging characteristics could be minimized yielding perfect lenses. The possibility of thus controlling electromagnetic fields has yielded in the past decade, even more fascinating possibilities ranging from higher efficiency antennae to invisibility cloaks. There is then an obvious imperative to mimic such aspects to thermal applications as well, e.g., in thermal cloaks, which would forbid the entry of thermal flux, or nanoscale heat sources. The notion of arranging materials with nominal isotropic attributes to yield unique characteristics would be a focus. Will discuss the fundamental rationale underlying the control of temperature and the manipulation of thermal flux, with reference to a multilayered composite material. We show that when the orientation of the layers in the composite is physically rotated with respect to a constant temperature gradient, there would then be a corresponding introduction of off-diagonal components in the thermal conductivity tensor and thermal anisotropy is induced. The consequent bending of the heat flux lines is found to depend on both the composite rotation angle, as well as the ratio of the thermal conductivities of the constituent materials. Will discuss the possibility of bending of heat flux in a multilayered composite typical to abnormal negative refraction, according to which the horizontal and the vertical components of the incident and refracted heat flux vectors point in the opposite direction. The engineered anisotropy of the thermal conductivity tensor is integral to such effects. We propose practical designs where such anomalous refraction phenomena may be observed and be used for heat flux redirection. Will discuss experimental evidence of the bending of heat to desired purpose, in analogy to that of light, through designed placement and orientation of nominally isotropic material is presented. This was done by inducing anisotropy in an effective thermal medium through off-diagonal components in the thermal conductivity tensor. An upward or downward heat flux bending of up to ± 260 , in close agreement with theoretical estimates, was obtained in a metamaterial constituted from thin, stacked layers of copper and stainless steel. Transient observations of heat flow indicate anisotropic energy transport hinging on the relative differences between the elements of the thermal diffusivity tensor. Will discuss method for the most efficient removal of heat, through an anisotropic composite. It is shown that an optimal placement of constituent materials, in the radial and the azimuthal variation, at a given point in the composite yields a uniform temperature distribution in spherical diffusers, accompanied by a very significant reduction of the source temperature, in principle, to infinitesimally above the ambient

temperature, and underlies the design of a perfect thermal diffuser. Orders of magnitude enhanced performance, compared to that obtained through the use of a diffuser constituted from a single material with isotropic thermal conductivity has been observed and the analytical principles underlying the design were validated through extensive computational simulations. This chapter, partially, has been published in "Layered thermal metamaterials for the directing and harvesting of conductive heat ", AIP Advances, 5, 053403, 2015 by Prabhakar R. Bandaru, Krishna P. Vemuri, Fatih M Canbazoglu and Rahul S. Kapadia.

Many animals have evolved behaviors, shapes and colorations to avoid being seen by other species of animals. For prey species, avoiding detection means a better chance of not being eaten. For predators, it means a better chance of catching a meal. For many, it means both. One common strategy is camouflage. Often, a few stripes or spots to break up the animal's out-line are all that is needed for it to blend with its surroundings. Most species of fish have some form of camouflage the most basic being a dark-colored back, to blend in with the bottom and avoid being seen from above, and a light-colored belly, to blend in with the sky and avoid being seen from below. Some species, such as flounders, change their coloration to match their surrounding's. The white-tailed deer fawn is camouflaged with light spots, resembling the dappled light that reaches the forest floor. Another form of camouflage is to be shaped like some part of the surrounding habitat. An insect called the walking stick is shaped (and colored) like a small twig, and is difficult to detect in the shrubs and trees where it lives. Within the Chesapeake Bay, there are some other spindly creatures that rely on their shape for camouflage. Skeleton shrimp and sea spiders resemble the branched hydroids in which they live. The elusive pipefish hide among the eelgrass by aligning themselves with the strap-like leaves swaying in the currents. Perhaps the most common strategy to avoid detection is to remain motionless. A fawn will instinctively lay curled on the ground when danger is near, even when its mother bounds away to safety. A killifish will freeze when it detects a predator, only to scoot into the safety of vegetation or other shelter when a predator comes within the critical distance of a few feet. Many snakes typically wait motionless to ambush any prey that wanders into striking distance. (Berger, 2017)

2.2.4 Thermal metamaterials

Thermal MM are a type of engineered material that exhibit unique thermal properties not found in natural materials. These materials are designed at the nanoscale or microscale to manipulate the

flow of heat in specific ways, allowing for precise control and manipulation of thermal energy. Unlike traditional materials that conduct heat through the process of diffusion, thermal metamaterials are engineered to exhibit properties such as negative thermal conductivity, thermal cloaking, or thermal diodes.

- Negative thermal conductivity: In some thermal metamaterials, the heat can be made to flow opposite to what would be expected in normal materials. These materials can effectively transport heat from a colder region to a hotter region, contrary to the laws of thermodynamics. This phenomenon is achieved by creating structures with intricate geometries that interfere with the heat transfer process, leading to a net heat flow in the desired direction.
- Thermal cloaking: Similar to how optical cloaking can render objects invisible by manipulating light waves, thermal cloaking involves manipulating heat flow to make an object thermally invisible. By designing metamaterial structures that can divert or redistribute heat around an object, it becomes possible to hide its thermal signature. This has potential applications in thermal camouflage or thermal management in electronics.
- Thermal diodes: Thermal MM can also be engineered to exhibit thermal rectification, meaning they allow heat to flow more easily in one direction than in the other. This property is analogous to an electrical diode, which allows the flow of current in one direction but blocks it in the opposite direction. Thermal diodes can be used to regulate heat flow in devices, enabling efficient thermal management and energy conversion.

The phenomenon of heat transfer has been of great practical importance, going all the way back to the days when heat was believed to be a fluid that flowed between media of different temperatures. By properly guiding this flow of caloric, engines could generate work, objects could be warmed or cooled, and thermal equilibrium could be achieved. While today these simple theories of heat transfer have been replaced by a more modern understanding of heat as disordered energy, the control of its flux is of no less importance. Rather, heat transfer and thermodynamics are now also of central importance to modern technologies including power generation and conversion, night vision, microelectronics, aerospace, etc. The significance of controlling heat flow is, however, matched by its difficulty. While, for simple tasks, like increasing the insulation of an object, the material requirements are well understood, guiding heat flux in other scenarios is more difficult.

Not only are there multiple forms of heat transfer—conduction, convection and radiation—but these processes are inherently less ordered than ballistic/wave transport, making confinement and steering more challenging.

In this section, we shall consider one technique, the use of thermal metamaterials, which has recently been developed to control thermal conduction (principally in solids, where conduction is the dominant heat-transfer mechanism). There are two principal aspects to thermal metamaterials: thee structuring of conventional media to create thermal properties not found in nature and the arrangement of these structured media to create new thermal devices. The second aspect, transformation media theory, was originally developed in optics with the devices created by this theory (including all of those discussed in this article) disseminating to other fields, such as acoustics and fluid dynamics, as the theory was modified to account for the varying physics. Experimental demonstration of different thermal metamaterial devices. (Li, 2018)

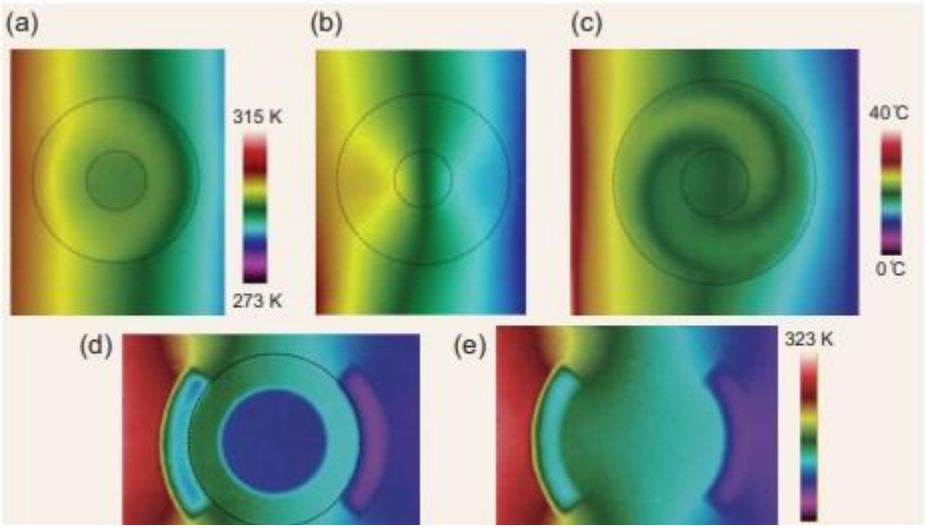

Figure 4 (a) Cloak. (b) Concentrator. (c) Rotator/inverter. (d) Camouflage: single conducting cylinder appears like two insulating segments. (e) Equivalent temperature profile of camouflage illusion, with two insulating segments actually present and no conduction

2.3 Methods to achieve thermal camouflage

Thermal camouflage technologies have experienced significant advancements, aiming to seamlessly merge the infrared (IR) signature of targets with the surrounding background to evade IR detection. The fundamental principle in achieving thermal camouflage lies in achieving an equilibrium in thermal radiation between the target and the background. This is accomplished

through two key strategies: the conductive strategy, which involves adjusting the local temperature field, and the radiative strategy, which focuses on modifying the local emissivity. In this regard, the initial focus of this research is to introduce thermal metamaterials and the engineering of wavelength-selective emissivity as effective approaches to achieve thermal camouflage. (Run Hu, 2021)

Over millions of years of natural evolution, many animals, like chameleon, squid, octopuses, cuttlefish, frog, etc., have developed the capability of camouflage that can blend themselves almost perfectly into the environment. Most of these natural animals with camouflage functionalities are in the visible spectra, while some are in the infrared (IR) spectra and the corresponding functionalities are called as thermal camouflage. The IR camera interprets the detected radiative energy into electrical signals to display a pseudo temperature field, by which we can "see" the world at night like an owl. Since all objects emit thermal signals in a radiative way, the thermal signals, compared with the visible signals, are much easier to expose in the IR camera against the background temperature. Therefore, nowadays many modern military weapons are equipped with an IR camera to make the targets "visible" for detection and location. To confront the IR detection, the thermal camouflage technologies are demanded to conceal the targets in the IR camera by tuning the thermal radiation to be the same or similar with the background environment. According to the working principle of an IR camera, i.e. Stefan-Boltzmann law Q ¼ erT4 with e the surface emissivity, r the Stefan-Boltzmann's constant, and T the absolute surface temperature, there are two basic strategies to achieve thermal camouflage: one is to change the local temperature T of the target, and the other is to tune the local surface emissivity e of the target. Following these two strategies, the corresponding thermal camouflages are called as conductive and radiative thermal camouflage technologies respectively and lots of progress on thermal camouflage have been achieved in this decade. (Run Hu, 2021) (al., 2018)

2.3.1 Conductive thermal camouflage

Conductive thermal camouflage aims at changing the surface temperature or to achieve thermal illusions near the target for thermal camouflage. It is well known that the governing equation of heat conduction is parabolic rather than hyperbolic, thus we cannot directly borrow the control approaches of wave optics to manipulate heat flow. Heat conduction is diffusive and heat flux vector is path-dependent, and therefore achieving directional heat flow is challenging. Fortunately,

with the advent of the artificial thermal metamaterials in last decade, their exotic and anisotropic characteristics of thermal properties endow the possibilities for the directional heat flow manipulation. The so-called thermal metamaterials, as a large branch of the metamaterial family, are man-made anisotropic, inhomogeneous, and with-singularity structured materials, which possess the exotic thermal properties compared to the nature-existing homogeneous materials. (Run Hu, 2021)

2.3.2 Radiative thermal camouflage

Another route to achieve thermal camouflage is to tune the surface emissivity to make the detected thermal radiation energy from the target object approximate to that of the background, and consequently the target will be concealed in an IR detector. Usually, the background temperature is below the target temperature, and thus reducing the surface emissivity is a typical and effective way to decrease the thermal radiation energy. For instance, people choose metal or low emissivity coatings or films to suppress the thermal radiation. However, this will reduce the radiative heat dissipation and will cause temperature rise in return. The Stefan-Boltzmann law tells us that thermal radiation power is proportional to the fourth power of temperature . Therefore, even a small temperature rise may enhance the thermal radiation power and weaken the thermal camouflage performance significantly. On the other hand, low emissivity treatments result in high reflection, which will be detected from the reflected signals and thus destroying the camouflage performance. To overcome such paradox, wavelength-selective emissivity engineering is required to achieve practical thermal camouflage (Run Hu, 2021)

2.4 What is Thermal Imaging?

- ✓ **What is Thermal Imaging?**

Thermal imaging is a sophisticated and non-invasive technique that utilizes infrared technology to detect heat emissions from various objects. This process converts the infrared energy, which is invisible to the human eye, into a visible light display. The infrared (IR) energy, or thermal energy, is emitted by all objects above absolute zero temperature, and the variations in these emissions form the basis of thermal imaging.

✓ What is a Thermal Image?

A thermal image, or thermogram, is the visual output produced by thermal imaging processes. Thermal images are captured using a specialized device, often referred to as a thermal camera or IR camera. A thermal image is distinctly different from a traditional photograph. While a conventional photograph captures visible light reflected from objects, a thermal image represents varying levels of infrared radiation emitted by the objects.

✓ What Does a Thermal Imaging Device Detect?

A thermal imaging device, such as a thermal imager or infrared imager, detects the IR radiation or heat emitted by objects. Based on these detections, it creates a 'thermal profile' or heat map of the area in focus.

Thermal imagers can detect:

- Overheating and circuit overload issues in electrical and mechanical systems.
- Building inefficiencies such as heat loss due to poor insulation, air leaks in systems, and water leaks within structures.
- Detection of pests or rodents within concealed areas and identification of trespassers in security applications.
- Human or animal presence in search and rescue operations and hot spot detection in forest fire management.
- Identification of structural defects in construction and engineering.

- Detection of health issues in medical and veterinary applications, and thermal pattern analysis in geological and environmental studies.

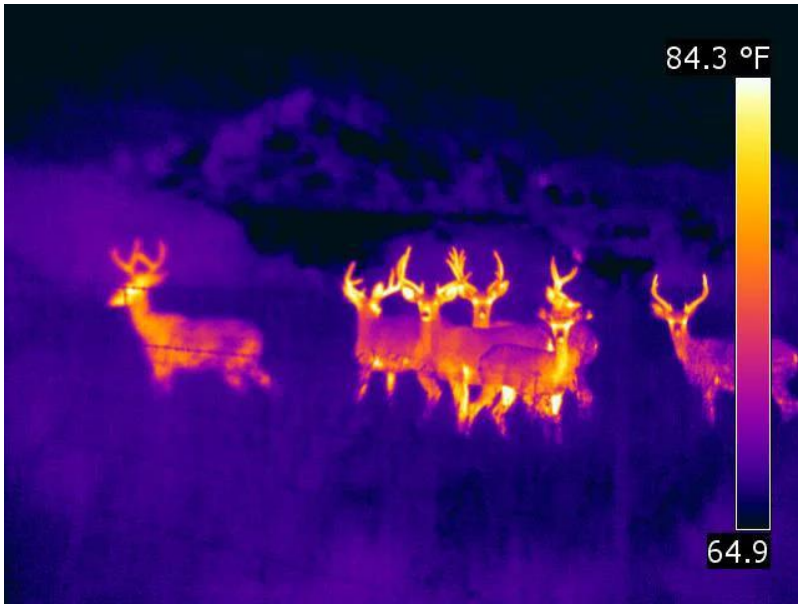

Figure 5 Example of thermal detection

2.4.1 How Does Thermal Imaging Work?

Thermal imaging operates on a simple yet effective principle: all objects emit infrared energy as a function of their temperature. This form of energy, invisible to the human eye, can be detected and translated into a visual image by a thermal imaging system. Step-by-step the process:

1. The thermal camera, equipped with an infrared detector, captures the infrared radiation emitted from all objects in its field of view.
2. The captured radiation data is then processed by the camera's built-in software. An optical system focused infrared energy to a sensor array, or detector chip, with thousands of pixels in a grid.
3. The software translates the data into an image, known as a thermal image or thermogram, representing the temperature variations of the scene.
4. Each temperature value is assigned a different color. Typically, warmer areas are represented in red, and cooler areas are shown in blue. A matrix of colors corresponding to temperatures is sent to the camera display as a picture. (Pritchard, p. 2023)

3. Methodology

Thermal camouflage technologies have gained increasing attention as effective means to counter the infrared (IR) detection of targets by blending their IR signature into the background. The key principle behind TC involves achieving a balance in thermal radiation between the target and the background. This balance is achieved through two fundamental strategies:

1. Conductive strategy: focuses on tuning the local temperature field,
2. Radiative strategy: involves tuning the local emissivity.

In the methodology I will employ a radiative strategy to manipulate heat transfer. This approach leverages the principles of thermal radiation, where heat is transferred through electromagnetic waves. By carefully designing the surface properties of the material, we can control the absorption of thermal radiation, thereby influencing the overall heat transfer process. This strategy involves adapting the material's absorptivity in specific wavelength ranges, allowing for selective absorption of thermal radiation. The design incorporates features Metal Dielectric Metal (MDM) metamaterials that can manipulate the interaction of thermal radiation with the material, ultimately achieving the desired absorption.

3.1 Crucial steps in methodology

In this study, the goal is to design and analyze a metamaterial with excellent thermal absorption properties. The research methodology consists of two main steps: material selection, configuration on COMSOL Multiphysics software, and analysis of the results using various computational techniques.

3.1.1 Material Selection:

The first step is to select materials with good thermal absorption properties. This involves conducting a comprehensive literature review to identify potential candidates. Relevant factors to consider include the material's thermal conductivity, specific heat capacity, and compatibility with the COMSOL Multiphysics software. The selected materials will form the basis for the metamaterial design.

For this research I choose the following materials that are perfectly suitable for the desired outcome, and this are Gold(Au) and Silicon(Si). The particular reason for these materials to be the number one choice is as follows:

Gold (Au):

- ✓ Gold is known for its excellent thermal properties, which make it an ideal choice for thermal absorption applications. It has a high thermal conductivity, allowing it to efficiently transfer heat. Additionally, gold exhibits a low thermal resistance, meaning that it can readily absorb and dissipate thermal energy.
- ✓ Furthermore, gold has a high specific heat capacity, which enables it to absorb a significant amount of heat without undergoing a rapid temperature increase. This property is crucial for ensuring that the metamaterial can effectively absorb and distribute thermal energy, preventing localized overheating.

The selection of Gold (Au) was inspired by its exceptional infrared (IR) properties. Notably, gold exhibits high absorption within the target absorption range of 3-5 micrometers, which is crucial for achieving the desired thermal camouflage effect. This means the metamaterial design, incorporating gold, would absorb incoming infrared radiation in this specific band, effectively reducing the object's thermal signature. Additionally, gold's chemical stability ensures consistent performance over time, a vital factor for reliable thermal camouflage. Furthermore, the ability to precisely control the size and shape of gold particles within the metamaterial allows for fine-tuning its absorption profile within the infrared range. This tunability offers the potential to optimize the metamaterial's performance for specific applications.

Silicon (Si), a nonmetallic chemical element in the carbon family (Group 14 [IVA] of the periodic table). Silicon makes up 27.7 percent of Earth's crust; it is the second most abundant element in

Element Properties	
atomic number	14
atomic weight	28.086
melting point	1,410 °C (2,570 °F)
boiling point	3,265 °C (5,909 °F)
density	2.33 grams/cm^3
oxidation state	−4, (+2), +4
electron configuration	$1s^2 2s^2 2p^6 3s^2 3p^2$

Figure 6 Property of Silicon

Silicon (Si) was chosen as the dielectric material for several compelling reasons. Firstly, silicon offers a good balance between electrical permittivity and thermal conductivity. This balance ensures the MM efficiently confines electromagnetic waves within the desired range (3-5 micrometers) while minimizing unwanted heat dissipation within the material itself. This thermal management is essential for maintaining the metamaterial's functionality and preventing thermal degradation that could hinder its effectiveness in thermal camouflage. Secondly, silicon boasts a well-established and mature fabrication process, making it a practical choice for translating the metamaterial design from simulation to a physical prototype. This existing infrastructure allows for cost-effective and reliable manufacturing, which is crucial for scaling the technology for real-world applications. Finally, silicon's compatibility with existing microfabrication techniques allows for the creation of intricate metamaterial structures with precise control over feature sizes. This precise control is instrumental in achieving the optimal absorption/reflection profile required for effective thermal camouflage.

One approach discovers combining gold (Au) and silicon (Si). Gold excels at absorbing infrared radiation, a key part of thermal signatures. Silicon's tunable properties, achieved through structuring, allow it to either absorb infrared. By strategically layering Au and Si with specific nanostructures, we can create metamaterials that absorb a broad range of infrared wavelengths, making an object appear cooler than it is. Alternatively, they can design cavities within the structure to trap specific infrared wavelengths, preventing them from escaping and contributing to the object's thermal signature.

3.1.2 Configuration on COMSOL Multiphysics Software:

Once the materials are selected, the next step is to configure the metamaterial design using the COMSOL Multiphysics software. This software provides a powerful platform for modeling and simulating complex physical phenomena. The configuration process involves defining the geometry, material properties, and boundary conditions necessary for the thermal absorption analysis. To configure the metamaterial in COMSOL Multiphysics, follow these steps:

a. Import or create a suitable geometric model that represents the desired metamaterial structure. in this case I personally designed the Metamaterial design shown below

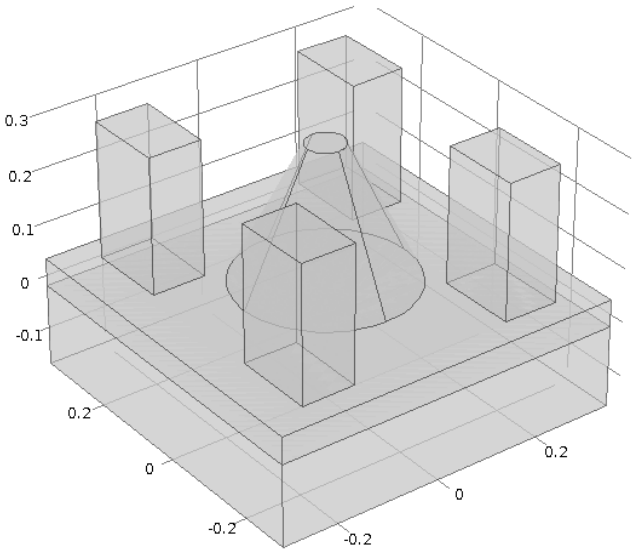

Figure 6 The full view of designed MDM metamaterial

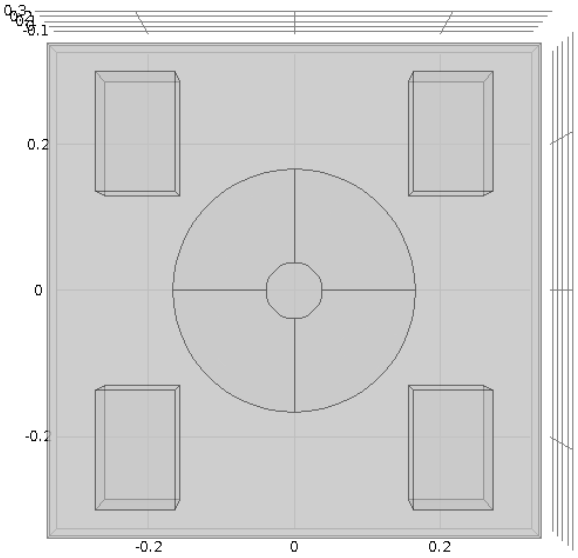

Figure 7 Top view

b. Assign the chosen materials to the different regions within the model.

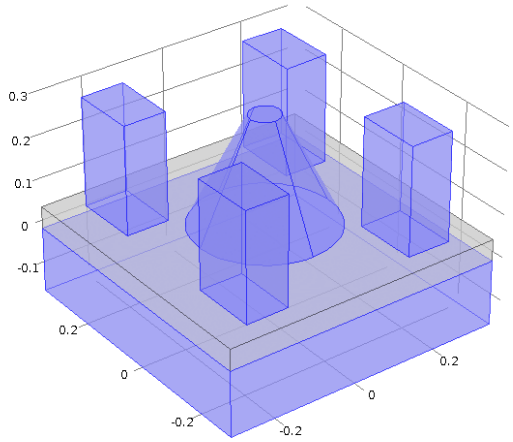

Figure 8 Gold (Au) (Highlighted part)

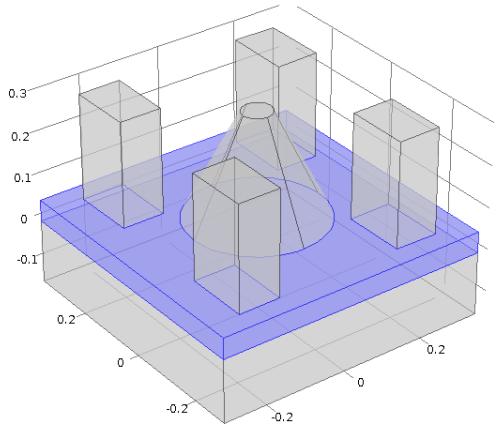

Figure 7 Silicon (Si) (Highlighted part)

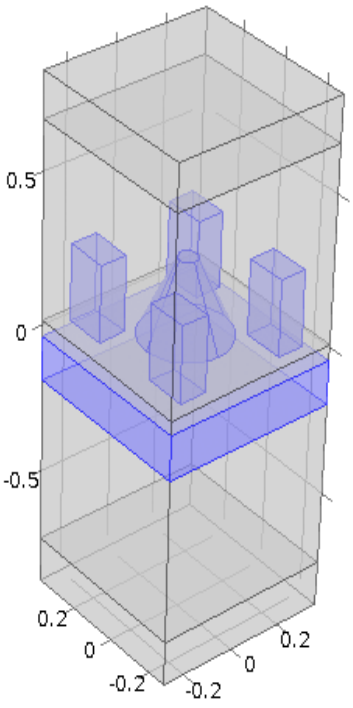

Full cell design (Au)

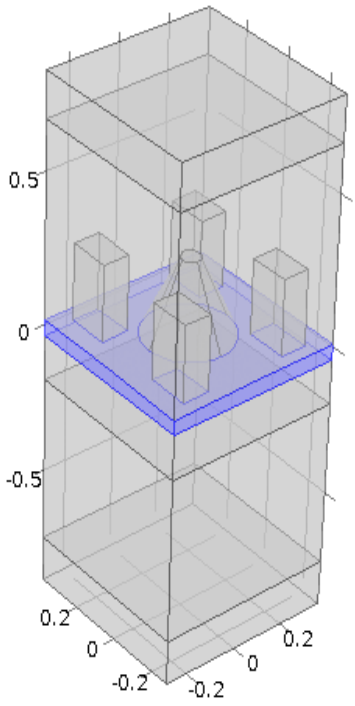

Full cell design (Si)

Figure 9 Full operational Design

c. Define the appropriate boundary conditions to simulate the thermal absorption behavior accurately.

d. Set up the necessary parameters and equations required to study the thermal absorption properties.

Parameters

Name	Expression	Value	Description
theta	0[deg]	0 rad	
phi	0[deg]	0 rad	
f0	200[THz]	2E14 Hz	
lda0	c_const/f0	1.499E-6 m	
W	0.65[um]	6.5E-7 m	width of unit cell
h1	0.1[um]	1E-7 m	height of unit cell
h2	0.05[um]	5E-8 m	dielectric
h3	0.15[um]	1.5E-7 m	ground
r1	0.25[um]	2.5E-7 m	bottom radius

Figure 10 Basic parameters

Finally, I computed to get the perfect result, and after a lot of trial and error the desired outcome was obtained which is high absorption within the range of 3-5μm of the Infrared range.

4. Result and Discussion:

Once the metamaterial is configured, it is crucial to analyze the results to evaluate its thermal absorption capabilities. This analysis will be performed using a combination of different simulations, as well as animations to visualize the behavior of the metamaterial under different thermal conditions. I employed the finite-different time-domain (FDTD) method to numerically study absorption properties of the structure of incident light. Periodic boundary conditions are used to approximate an infinite array in the x and y directions, and perfect matching layers are used in the z direction. The complex and frequency dependent metal dielectric constant are described by Drude model.

The MM emitter designed has a three-layer structure as demonstrated in Figure 11 underneath. The top most layer is composed of 4 Nano-blocks(with equal width and depth of 0.25μm) with the height of and a Nano-cone(with bottom radius of 0.25μm) made of Gold. Au has been used for high temperature applications due to a high melting temperature (1337.5 K). Si, also, has adequate melting temperature (1687 K). A unit cell has a layer, designed from Au and Si with height h1 a cone of bottom radius r1. A thin film of Si, thickness h2, is designed on top of a Au film of thickness h3, which acts as a perfect reflector.

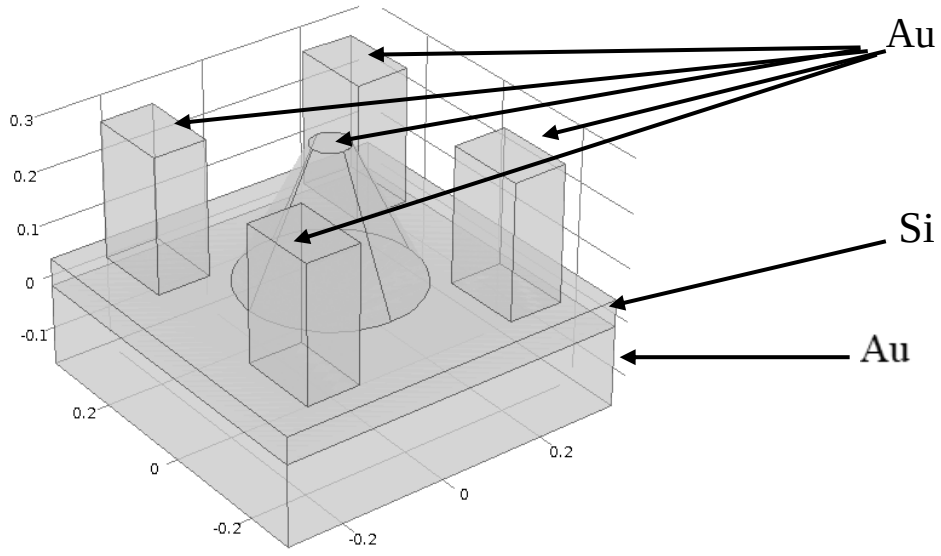

Figure 11 Design with Au and Si

The height of Nano-cone is 0.25 μm and thickness of AU film is 0.15 μm, these parameters were used in this study. In contrast width of the unit cell, bottom radius and thickness of dielectric layer are variables. Si, is introduced as the spacer layer with thickness h2. Au, as substrate with a thickness of h3 was selected to prevent transmission of the incident light. EM wave was released from the in port to our designed MM absorber by COMSOL Multiphysics as shown on figure 12. Through a lot of optimization and trial the results below were obtained. In the next sub topics, the effect of variable parameters on the absorption of the designed MM emitter were discussed.

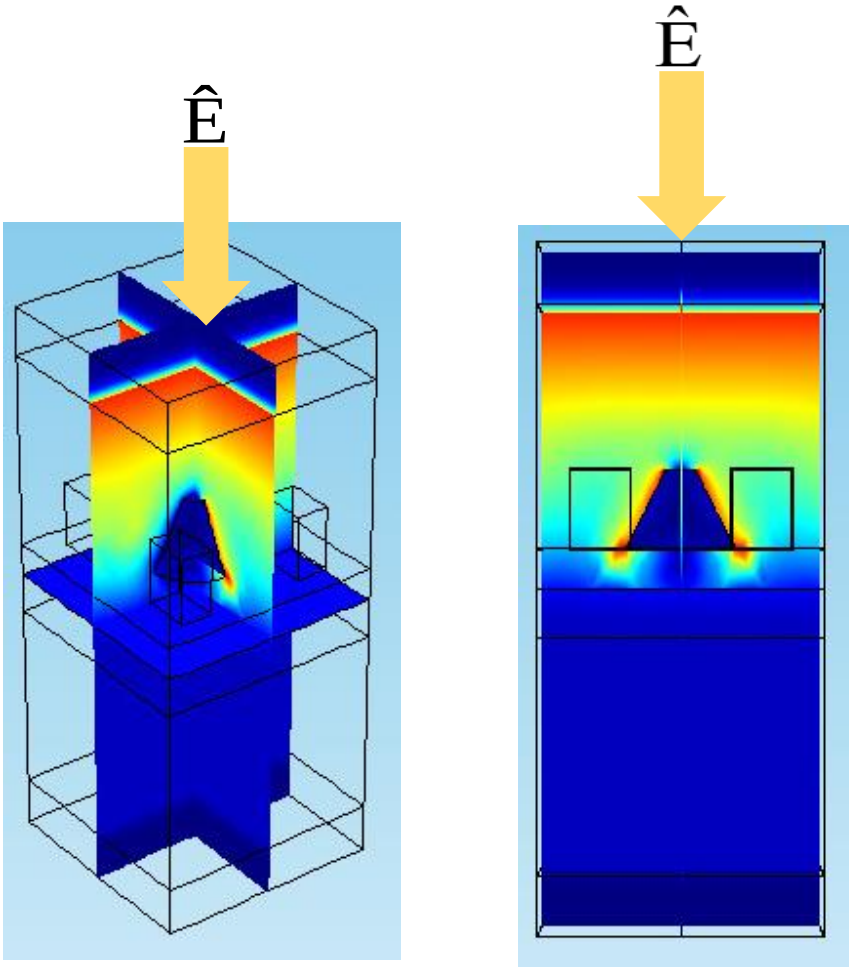

Figure 12 Image of the whole cell after computation

4.1 Effect of width of the unit cell (w) on spectral absorption of the emitter

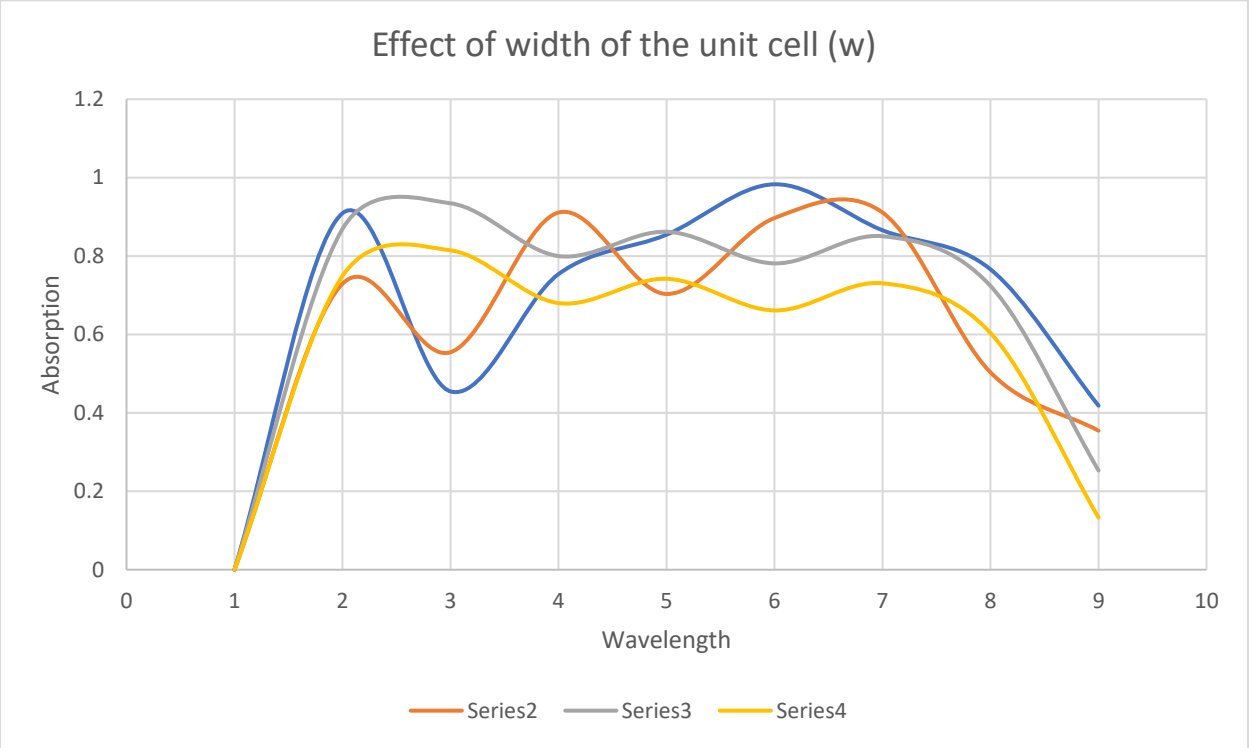

Figure 7 Effect of width of the unit cell (w)

4.2 Effect of bottom radius of Nano-cone (r1)

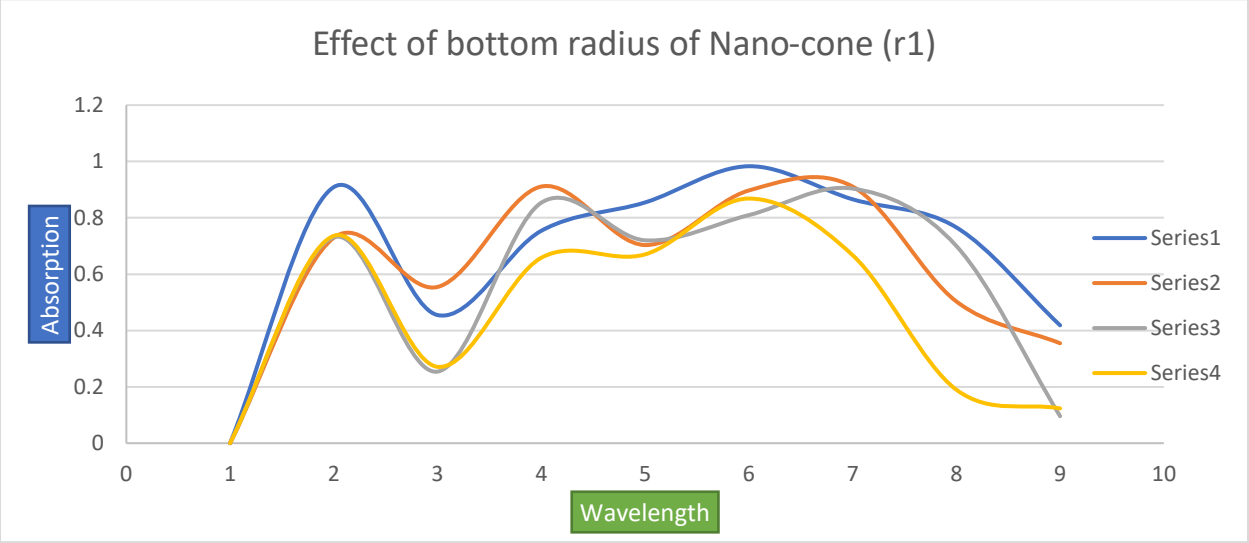

Figure 8 Effect of bottom radius of Nano-cone

4.3 Effect of thickness of dielectric (h2)

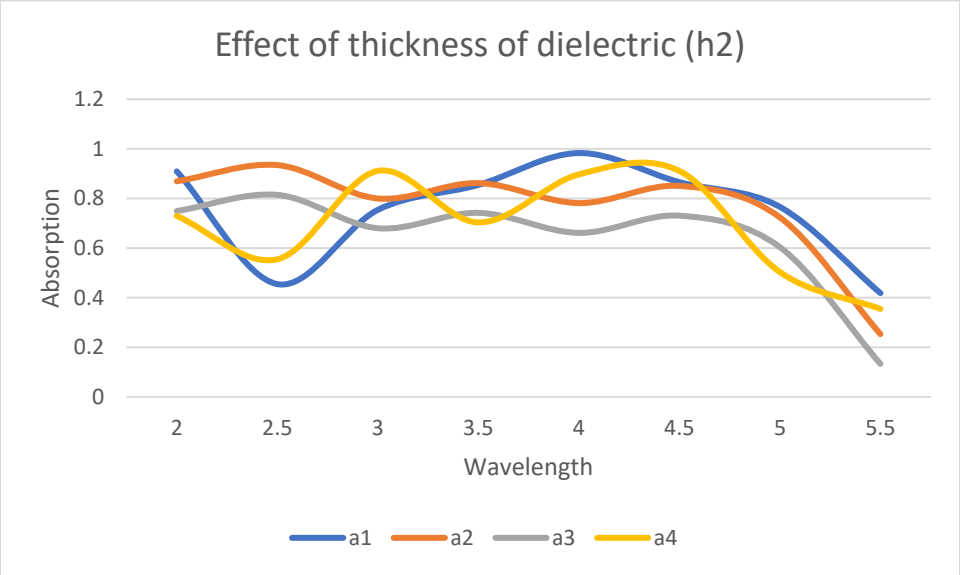

Figure 9 Effect of thickness of dielectric

4.4 Performance of designed metamaterial absorber

After a lot of trial and error I managed to achieve 98.3% near perfect absorption. The result is shown below in graph.

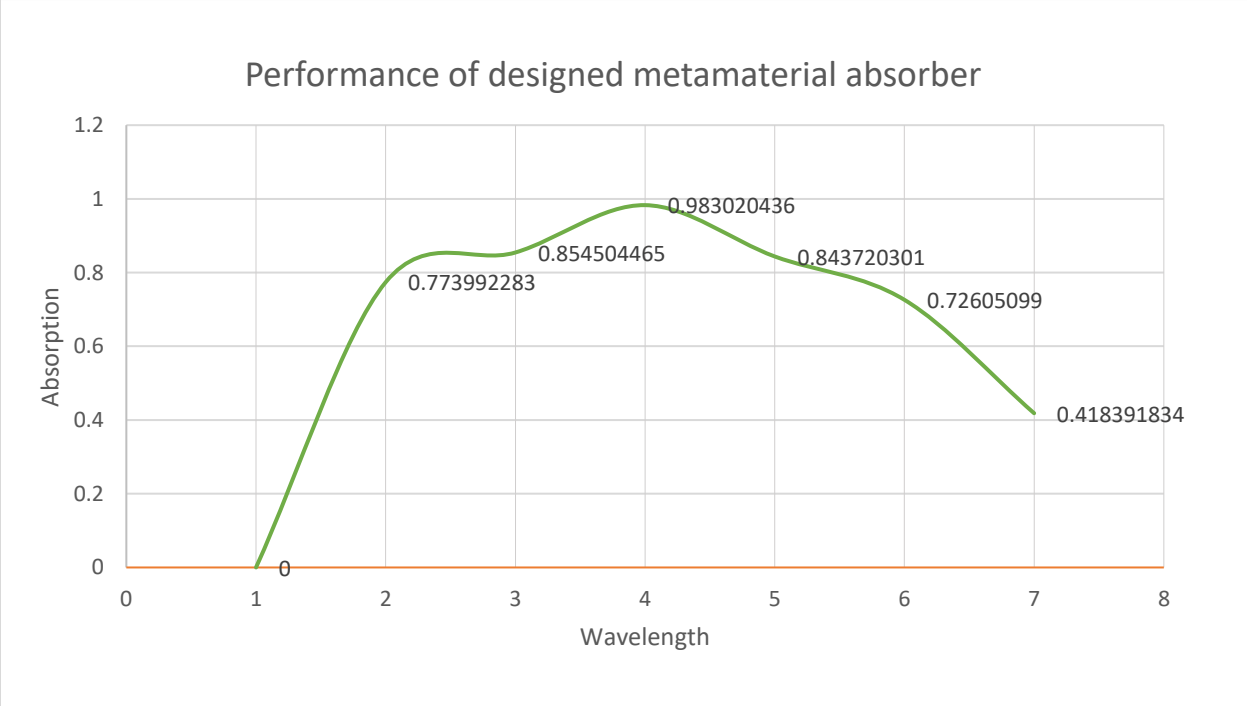

Figure 10 Performance of designed Metamaterial Absorber

5. Conclusion

In conclusion, through our research titled "Computational Modeling of Metamaterial for Thermal Camouflage," I have successfully designed a multi-layer perfect absorber using Au-Si-Au metamaterial for infrared detection technology. The absorption properties of this structure were thoroughly investigated using the finite-difference time-domain (FDTD) method.

In this research, computational modeling was employed to design a metamaterial exhibiting exceptional thermal absorption properties. The achieved absorption lies within the crucial 3-5 micrometer range of the atmospheric window. This translates to a metamaterial that can effectively camouflage objects from thermal detection in real-world environments. The potential applications of this discovery are vast, holding significant value for both military and civilian sectors. The military could utilize this technology to create new forms of stealth for soldiers and equipment, while civilian applications could range from improved building insulation to more efficient energy harvesting devices. Further research into the physical realization of this metamaterial is necessary to fully harness its potential and bring these groundbreaking applications to life.

Reference

al., M. M. (2018). Adanced Engeenering Material. 18-38.

Berger, J. B. (2017). Mechanical metamaterials at the theoretical limit of isotropic elastic stiffness. . *Nature*, 533–537.

Bilotti, F., & Sevgi, L. (2012). Metamaterials: Definitions, properties, applications, and FDTD-based modeling. *RF and Microwave Computer-Aided Engineering*.

Guenneau, S. B., Movchan, A., Pétursson, G., & Anantha Ramakrishna, S. (2007). Acoustic metamaterials for sound focusing and confinement. *New Journal of Physics*, 399.

Li, S. R. (2018). *Thermal metamaterials: functions and prospects.* Colorado Boulder, USA: Advance access publication.

Paras, H., & Gangwar, R. P. (2014). Metamaterials: Characteristics, Process and Applications. 98,99.

Pritchard, J. R. (202, 5 13). *https://www.fluke.com/en-us/learn/blog/thermal-imaging/how-infrared-cameras-work*. Retrieved from Fluke Corporation Web site: www.fluke.com

Run Hu, W. X.-W. (2021). Thermal camouflaging metamaterials. *Materials Today*, 120-141.

Slyusar, V. (2009). Metamaterials on antenna solutions. *Lviv, Ukraine*.

Smith, D. R. (2004). Metamaterials and Negative Refractive Index. *Science*.

Smith, D. R. (2006). "What are Electromagnetic Metamaterials? *the original*.

Zhao, D. L. (2017). Thermal Camouflage Metamaterials. *Advanced Engineering Materials*.